PRODUCT SHEET

Description:
Blank Metal Key SISO, NPL, Round Shape, FN2 Key Way

Item number:
14.04.099-0

Units	Box	Carton	HS Code	Barcode
Pcs.	400	2000	8301700000	5704866040082

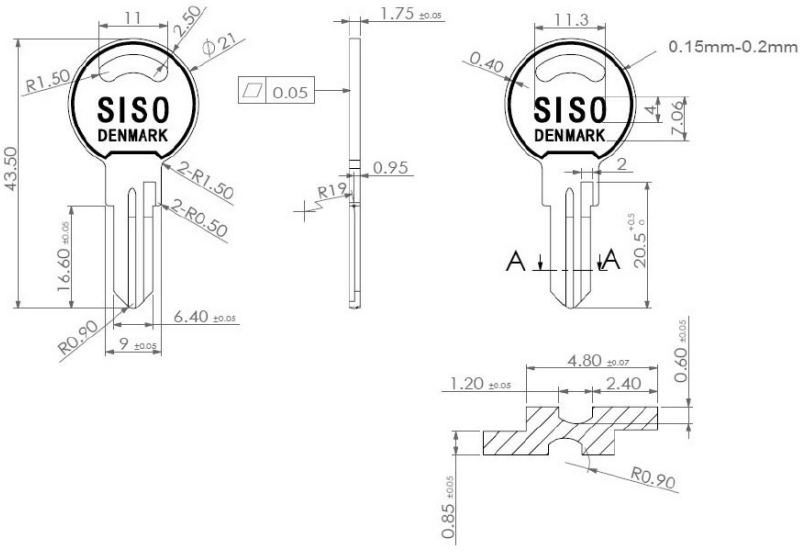

SISO A/S
Mileparken 11
DK-2740 Skovlunde
Denmark
VAT: DK 24786013

Phone +45 45 830 900

www.siso.dk
siso@siso.dk

Danske Bank
Nytorv Branch
Copenhagen
SWIFT: DABADKKK

Account no.
4180 3112 112936
IBAN Account
DK7230003112112936